Refrigerator

User manual

Model:
RF50K*

Free Standing Appliance

SAMSUNG

Contents

Safety precautions 3

Safety instructions 3
Important safety symbols and precautions: 4
Serious warning signs relevant to transportation and site selection 5
Serious warning signs relevant to assembly 6
Serious warning signs relevant to use 9
Signs relevant to cleaning and maintenance 13
Serious warning signs relevant to waste disposal 14

Installation 16

Preparation for refrigerator installation 16
WiFi connection 18
Level the refrigerator and adjust the height of the door 19

Operation Guide 22

Usage of control panel 22
Samsung smart home (applicable models only) 24
Components and functions (RF50K59** Series) 28
Components and functions (RF50K58** Series) 30
Control Temperature 32
Dismantle the refrigerator accessories 34
Clean the refrigerator 36

Fault analysis 40

Fault diagnosis function 40
Fault analysis 41
Fault analysis of Samsung smart home 43

Safety precautions

Safety instructions

- Prior to using the refrigerator, please carefully read this manual and keep it in a safe place near the refrigerator for future reference.
- Please use this equipment only as described in this manual. This equipment is not allowed to be used by the persons missing limbs, disabled in feeling or spirit or lack of relevant experience (including children), unless under supervision or relevant guidance of the person responsible for their safety.
- The children above 8 years old and persons with impaired limbs, disabled in feeling or spirit or lack of relevant experience may only be allowed to use this equipment on the premise of supervision or relevant safety guidance and learning relevant danger by other persons. Children are not allowed to use this equipment. Children are not allowed to clean or maintain this equipment without supervision.
- The warnings and important safety instructions in this manual do not include all possible conditions and situations. When installing, maintaining and using this refrigerator, you shall follow the common sense, warnings and precautions and be responsible for your own behaviors.
- As the following operation instructions apply to various models, the properties of your refrigerator may be slightly different from those described herein, and not all warning signs apply. For any questions or problems, please contact the nearest service center or log in www.samsung.com to seek on-line help or information.

Safety precautions

Important safety symbols and precautions:

⚠ Warning

Dangerous or unsafe operations may cause serious personal injury or death.

⚠ Caution

Dangerous or unsafe operations may cause minor personal injury or properties damage.

Note

Please do not try.

No disassembly.

Please do not touch.

Carefully operate as requested.

Please unplug the power plug from the wall socket.

Please provide ground protection measures for the equipment to avoid electric shock.

Please contact the center for help.

These warning signs are designed for preventing you and others from being damaged.

Please strictly follow the above instructions.

After you finished reading this part, please keep it properly for future reference.

Serious warning signs relevant to transportation and site selection

⚠ Warning

- When transporting and assembling the refrigerator, please be cautious for fear of damaging any parts of refrigerating circuit.
- This product applies R600a freezing medium. R600a freezing medium is a natural gas that can be used in various environments and also an inflammable gas.
  - The freezing medium leaked from the refrigerating coil may cause a fire or injure the eyes. If leakage is found, please avoid any open fire or potential combustion source and ventilate the room where the refrigerator is placed for several minutes.
  - In order to prevent the inflammable gas-air mixture from producing in case of leakage of the refrigerating circuit, the size of the room for accommodating the refrigerator shall be selected based on the quantity of the freezing medium.
  - Do not start the refrigerator in case of any damages. For any questions, please consult the distributor. In the room where the refrigerator is placed, 1 cbm indoor space shall be provided for every 8 g R-600a freezing medium in the refrigerator. The label inside the refrigerator shall be indicated with the quantity of the freezing medium of each specific refrigerator.
- The freezing medium ejected from the refrigerating coil may cause a fire or injure the eyes. If the freezing medium in the circuit leaks, please avoid any open fire, take all inflammable articles from the refrigerator and ventilate the room immediately.
  - Otherwise, a fire disaster or an explosion may be caused.

Safety precautions

Serious warning signs relevant to assembly

⚠ Warning

- Please do not assemble this equipment in a damp location full of oil or dust or under exposure of direct sunshine and water leakage (leakage of rain).
  - Damage of the insulated wrapper of the electric parts may cause electric shock or fire disaster.
- Please do not expose the refrigerator under direct sunshine or the heat source of the furnace, indoor radiator or other equipment.
- Please do not connect more than one device to the same power panel with several sockets. The refrigerator shall always be connected to the independent power socket corresponding with the rated voltage of the nameplate.
  - In this case, the best performance may be provided and overload of the indoor wired circuit may be prevented for fear of causing fire disaster by the overheated line. Please do not plug the power plug in if the socket is loose.
  - Otherwise, electric shock or fire disaster may be caused.
- Please do not use the power line broken or worn in the middle or end.
- Please do not bend the power line or place weights on it.
- Please do not use smoke agent near the refrigerator.
  - Using smoke agent near the refrigerator may cause explosion or fire disaster.
- Please do not install this equipment in the place where gas leakage may occur.
  - This may cause electric shock or fire disaster.

- It is suggested to conduct equipment installation or any maintenance service by the qualified technician or maintenance company.
- Otherwise, electric shock, fire disaster, explosion, product fault or personal injury may be caused.
- Prior to using this refrigerator, be sure to select an appropriate locate for correct assembly as described herein.
- Please do not install this refrigerator in a damp place or a place where water may be contacted.
- Damage of the insulated wrapper of the electric parts may cause electric shock or fire disaster.
- Connect the power plug to an appropriate location so that the power line can fall naturally.
- If you inverse the power plug, the plower line may be cut off and a fire disaster or an electric shock may be caused.
- Please be sure that the back of the refrigerator will not squeeze or damage the power plug.
- When moving this refrigerator, be careful not to crush or damage the power line.
- This may cause electric shock or fire disaster.
- The equipment shall be properly placed for the convenience of connecting to the power socket after installation.
- Please keep the packaging materials out of reach of children.
- The children who covering the packaging materials over the head may suffocate them to death.

- The refrigerator shall be grounded.
- Be sure to earth the refrigerator to avoid any power loss or electric shock caused by electric leakage of the refrigerator.
- Do not earth with gas pipe, phone line or other potential lightning rod.
- Improperly using the plug may cause electric shock.

- If the power line is damaged, please immediately ask the manufacturer or its service agent for replacement.
- The fuse wire of the refrigerator shall be replaced by the qualified technician or maintenance company.
- Otherwise, electric shock or personal injury may be caused.

Safety precautions

Warning signs related to installation

⚠ Caution

- Be sure that the ventilation hole of the refrigerator case or installing support is unblocked.
- After installing the equipment, restart to use it 2 hours later.
- Some models of the refrigerator has protective film on surface which is able to prevent the refrigerator from being scratched in the process of transportation. In order to avoid static electricity, please tear the protective film off slowly. If the protective film is not removed for a long time, color difference of the steel plate may be caused.

Serious warning signs relevant to use

⚠ Warning

- Please do not plug or unplug the power plug when the hand is wet.
- Please do not store articles on top of the refrigerator.
  - Otherwise, when opening or closing the refrigerator door, the articles placed on it may fall and cause personal injury and/or damage of the articles.
- Please do not place articles with water on the refrigerator.
  - If the water splashes, there is the danger of causing fire disaster or electric shock.
- Please do not allow children to suspend on the refrigerator door.
  - Otherwise, serious personal injury may be caused.
- Please do not leave the refrigerator door open for a long time without giving attention and do not allow children enter the refrigerator.
- Please do not allow infants or children enter the drawer.
  - If they are trapped in it, death or personal injury due to suffocation may be caused.
- Please do not sit at the door of the freezer.
  - Otherwise, the door of the freezer may be broken and personal injury may be caused.
- Don not store volatile or inflammable substances in the refrigerator, such as benzene, diluent, ethyl alcohol, ether or liquefied petroleum gas.
  - Storage of any such products may cause explosion.
- Do not store pharmaceutical products, scientific materials or other products that are sensitive to low temperature in the refrigerator.
  - Do not store the products required to strictly control temperature in the refrigerator.
- Do not place or use electrical appliance in the refrigerator, except for those recommended by the manufacturer.
- Do not dry the inner side of the refrigerator with blower. Do not place lighted candle in the refrigerator for the purpose of removing the odor.
  - This may cause electric shock or fire disaster.
- Please do not touch the inwall of the freezer or the articles in the freezer when the hands are wet.
  - Otherwise, cold injury may be caused.
- In addition to the methods suggested by the manufacturer, please do not quicken the unfreezing process with the mechanical device or any other methods.
- Please do not damage the freezing circuit.
- This equipment shall be placed near the power plug and not use external socket.
  - Otherwise, this may cause electric shock or fire disaster due to electric leakage.
- Do not store explosive in the appliance, such as comburent spray.

Safety precautions

- This product is only designed for storing food in home environment.
- Bottled articles shall be closely placed together for fear of pouring.
- In case of gas(such as propane gas and liquefied petroleum gas) leakage, please ventilate immediately and do not touch the power plug. Do not touch the refrigerator or power line.
  - Please do not use ventilator.
  - Spark may cause explosion or fire disaster.
- Only use the LED lights provided by the manufacturer or service agent.
- Take care of the children and ensure they will not play with and/or climb the refrigerator.

- Do not dismantle or repair the refrigerator by yourself.
  - Otherwise, the danger of fire disaster, fault and/or personal injury may be caused. In case of any fault, please contact your service agent.
- Please do not attempt to repair, dismantle or refit this equipment by yourself.
  - Please do not use any fuse wire (such as copper wire and steel wire) other than the standard fuse wire.
  - If this equipment needs to be repaired or reinstalled, please contact the nearest service center.
  - Otherwise, electric shock, fire disaster, product fault or personal injury may be caused.

- If the refrigerator produces queer noise, burning smell or smog, please plug the power plug out immediately and contact the nearest service center.

- Otherwise,electric shock or fire disaster may be caused.

- If you are in trouble when you change the headlamp, please contact the service agent.
- If the product is equipped with LED light, do not dismantle the lamp shade and LED light by yourself.

- Please contact your service agent.

Safety precautions

Signs relevant to use

⚠ Caution

- In order to achieve the best product performance, please follow the following instructions:

- Please do not place food densely in front of the ventilation hole in the back of the refrigerator, or the free air circulation of the freezer of the refrigerator may be influenced.
- Prior to placing the food in the refrigerator, properly wrap the food or place the food in an enclosed container.

- Please do not put carbonated beverages or fizzy drinks in the freezer.
  Please do not put bottles or glass containers in the freezer.
- The glass may be broken and cause personal injury and properties damage if the substances in them are frozen.

- Please do not change the function of the refrigerator or refit the refrigerator.
- Otherwise, personal injury and/or properties damage may be caused.
  Any change or refit conducted by the third party on this refrigerator will not be subject to the warranty service of Sumsung who will not be responsible for the safety problems and damages caused by the third party.

- Please observe the longest storage time and valid period of the frozen products.

- Please do not spray such volatile substances as insecticide on the surface of the refrigerator.
- Besides the harm to heath, this may cause electric shock, fire disaster or product fault.

- Please do not intensely strike or forcefully push the surface of the glass.
- Otherwise, personal injury and/or properties damage may be caused by the broken glass.

- Only infuse drinking water (mineral water or pure water) into the ice-making box.
- Only the ice-making box provided by the refrigerator is allowed to be used.

Signs relevant to cleaning and maintenance

⚠ Caution

- Please do not spray water directly to inside or outside of the refrigerator.
- Otherwise, the danger of fire disaster or electric shock may be caused.
- Please do not use or place such substances that are sensitive to temperature as inflammable aerosol, inflammable substances, dry ice, medicine or chemicals. Please do not store volatile or inflammable objects or substances in the refrigerator (benzene, diluent and propane gas, etc.).
- This refrigerator is only designed for storing food.
- Otherwise, a fire disaster or an explosion may be caused.
- Please do not spray cleanser on the display directly.
- Otherwise, the printing characters on the display will fall off.
- Clear all foreign matters or dust on the pins of the power plug.
  But before cleaning the plug, please do not use wet cloth and clear all foreign matters or dust on the pins of the plug.
- Otherwise, the danger of fire disaster or electric shock may be caused.
- Please apply hairbrush or toothbrush to clean the place hard to be cleaned like hinge.

- Prior to cleaning and maintaining, please plug the power line of the refrigerator out.
- If the foreign matters such as water flow into the refrigerator, please plug the power plug out and contact the nearest service center.
- Otherwise,electric shock or fire disaster may be caused.

Safety precautions

Serious warning signs relevant to waste disposal

⚠ Warning

- This product applies R-600a freezing medium which is inflammable gas, so please contact relevant local department to know how to process this product in a safe manner.
- This product applies cyclopentane as foamer at the thermal insulating layer and the gas in the thermal insulating materials needs to undergo special processing procedure. Please contact local department to know how to process this product in a safe and environmental friendly manner.
- Prior to processing this product as waste, be sure that all pipes are intact at the back of the refrigerator.
  These pipelines shall be cut broken in an open place.
- When processing this product or other refrigerators as waste, please dismantle the refrigerator door/sealing strip of the refrigerator door for fear that infants or small animals are trapped in it. Install the shelf in place to prevent children climbing in it easily.
  Take care of the children and ensure they will not play with this equipment.
- Please process the packaging materials of this product in an environmental friendly way.
- Please keep the packaging materials out of reach of children.
- If the children cover the packaging bag over the head, suffocation may be caused.

Other prompts for correct use

Note

- In case of power failure, please call local electric power company to know the time of the consistent power failure.
- Most of the power failure will be recovered in one or two hours, so it will not influence the temperature of the refrigerator. However, reduce the times of opening the refrigerator door as much as possible during the power failure.
- However, if the power is off for more than 24 hours, please take all frozen food out.
- If the temperature of the place where the refrigerator is located is lower than the minimum temperature of the temperature range designed for refrigeration, then the refrigerator may be unable to always work in normal conditions (the temperature may be overhigh inside the refrigerator).
- Please do not store perishable food under low temperature in the refrigerator, such as banana and melon.
- Your refrigerator produces no frost, which means that you do not need to manually remove the frost because the refrigerator itself can automatically defrost.
- In the process of defrosting, rise of temperature is up to national standard.
- Any temperature rise in the process of defrosting will shorten the storage life of the frozen food.

Energy saving tips

- Install the refrigerator in a cool, dry and well ventilated room.
  Ensure the refrigerator will not directly expose under the sunshine and never approach direct heat source (such as radiator).
- Do not block any ventilation hole or grid on the refrigerator.
- Do not put the hot food in the refrigerator until cooled.
- Unfreeze the frozen food in the fridge.
  In this case, you may cool the food in the fridge with the low temperature of the frozen food.
- When taking the food out, do not open the refrigerator door too long.
  The shorter the refrigerator door is open, the less the frost in the freezer will be produced.
- Regularly clean the back of the refrigerator. Dust will increase energy consumption.
- Do not set the temperature lower than the needed.
- Ensure enough air circulated at the bottom and back of the refrigerator.
  Do not cover the air hole.
- At the time of installation, ensure there are gaps on the left, right, back and top of the refrigeration.
  This will be conductive for reducing energy consumption and electric charge.
- In order to effectively use energy, please assemble all interior accessories in the position designated by the manufacturer, such as basket, drawer and shelf.

Installation

Preparation for refrigerator installation

Thank you for purchasing Samsung refrigerator.
We hope you will like the advanced functions and efficiency provided by this new equipment.

Select the best position for installing the refrigerator.

- No direct sunshine.
- Level floor (or nearly level).
- There is enough room for opening the refrigerator door.
- There are enough spaces for air circulation on the left, right, top and back side. Insufficient room around the refrigerator may disable the internal cooling system.
- It is easy to move the refrigerator in case of maintenance or repair.
- Please do not install the refrigerator under an ambient temperature of higher than 43°C or lower than 5°C.

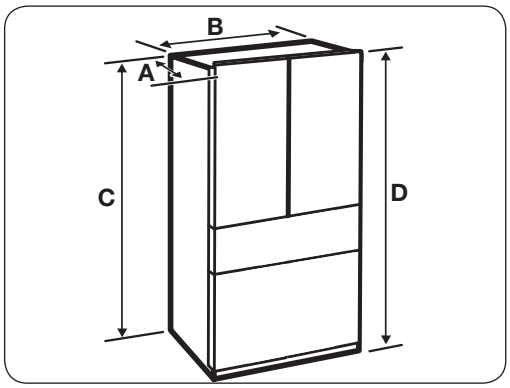

RF50K58**Series

Depth “A”	745 mm
Width “B”	795 mm
Height “C”	1898 mm
Total height “D”	1920 mm

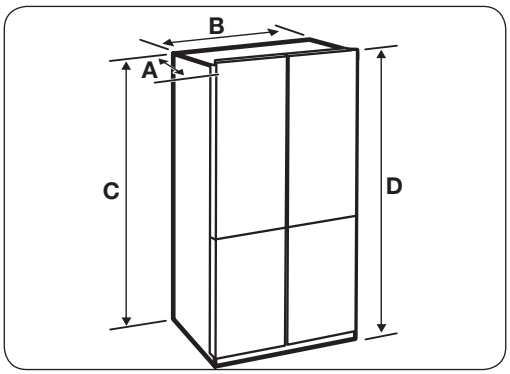

RF50K59**Series

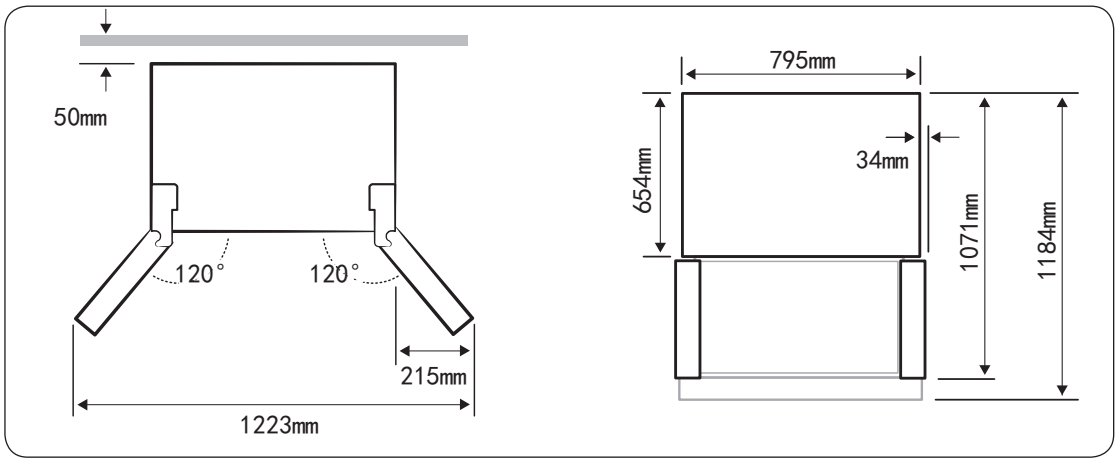

Note: All are the design sizes of the product and difference may produce by measurement.

Precautions when moving the refrigerator

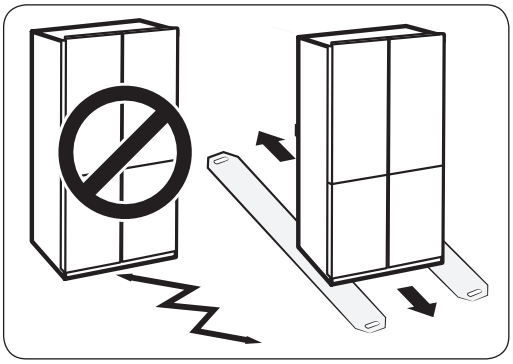

- The floor for placing the refrigerator shall be flat and solid so as to support its full load and ensure its normal operation.
- In order to protect the floor, you may cut a carton level and pave it under the refrigerator.
- When moving the refrigerator, you shall pull the refrigerator out directly or put it back directly. Do not sway from one side to another.

Installation

WiFi connection

You can control the refrigerator remotely using the Smart Home Dongle that is sold separately.
To purchase the Smart Home Dongle, visit www.samsung.com and follow the product information about the dongle.

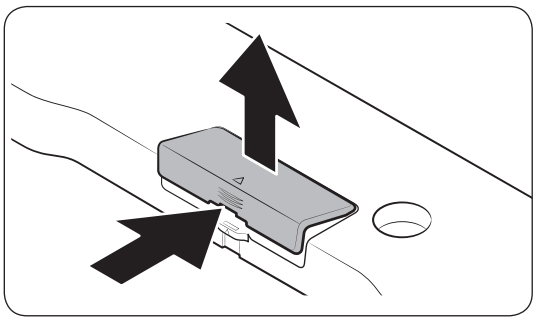

1. Press to unlock the arrow area of the dongle cover.
2. Open up the dongle cover.

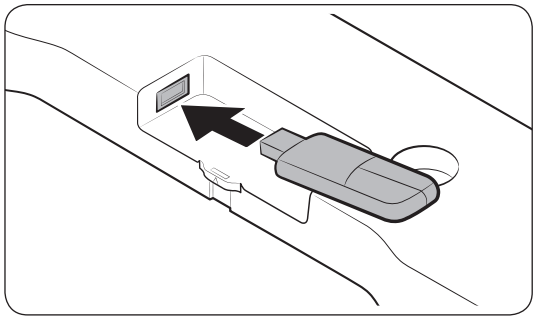

3. Insert the Smart Home Dongle into the dongle port in the correct direction.

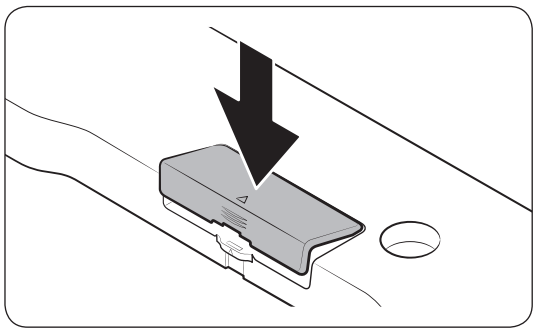

4. Insert the upper area of the dongle cover first, and then close to lock as shown.

Level the refrigerator and adjust the height of the door

Tools you may need (unprovided)

Cross screwdriver (+)	Flat head screwdriver (-)	Ring wrench (10 mm)
Pincer	Allen wrench (4 mm)	Allen wrench (5 mm)

⚠ Warning

- Prior to leveling the refrigerator and adjusting the height of the door, please plug the power plug out.

How to level the refrigerator

If the refrigerator is not placed level, a height difference between the refrigerator doors may produce.

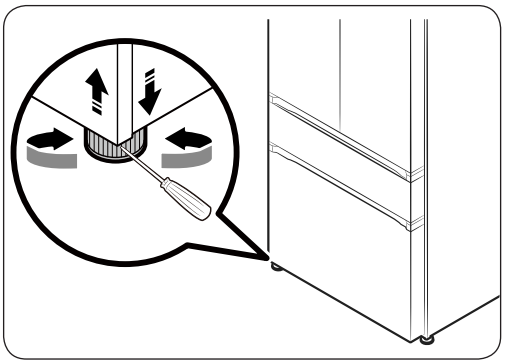

- Insert the flat head screwdriver (-) into the groove of the horizontally adjusted stand bar control rod, then rotate the control rod clockwise or anticlockwise so as to level the refrigerator. Rotate the control rood clockwise to lower the refrigerator. Rotate the control rood anticlockwise to raise the refrigerator.

Note

- If the front and back position of the refrigerator is not level, please put a solid subplate under the stand bar behind the support (such as plastic plate and plastic ruler), and then fix it with plastic cement. When pushing the refrigerator to the installation position, please be sure that the back stand bars are on the subplate.
- If you use wooden floor or similar soft floor, please be careful not to damage the floor when pushing the refrigerator.

Installation

How to adjust the height of the refrigerator door

If any door is lower than the other, you may adjust them as follows:

- Prior to adjustment, please check whether the refrigerator has been leveled.

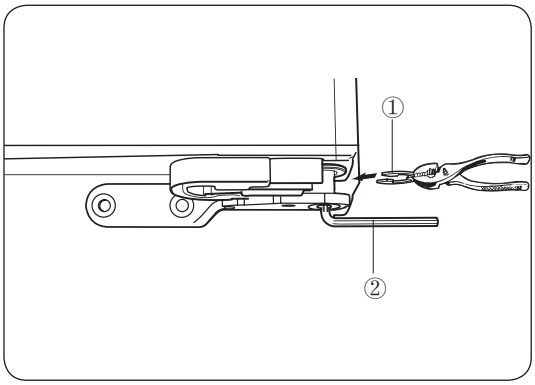

Method (I) as shown in the figure:
Insert the snap ring 1 between the door and the hinge with a pincer to adjust the height difference of the refrigerator doors.
After checking the height difference, please select a snap ring which has a proper thickness.
Important information: You may only insert one snap ring. Insertion of two or more snap rings may cause the snap ring to slide or produce abrasion sound. Lift the lower door upward and insert the snap ring into the gas between the door and the hinge.

Method (II) as shown in the figure (applied to RF50K58** Series):
Insert the allen wrench 2 of 4 mm into the hold at the lower part of the hinge, and then rotate the wrench clockwise (to lower the door) or anticlockwise (to raise the door).

Important information:

- Prior to rotating the wrench, please take the articles on the bottle shelf of the door out, then the wrench will be easily turned.

⚠ Caution

- To avoid personal injury, please be careful to insert or extract the snap ring.
- Please keep the snap ring and wrench out of reach of children to ensure that the children will not play with them or put them in the mouth.

Note

- Snap rings of 1 mm, 1.5 mm, 2 mm and 2.5 mm are provided with refrigerator.
- If the food is put in the refrigerator after leveling, the increased weight of the food may cause the refrigerator not level.
  In this case, please readjust it level with the same procedure.
- If the refrigerator door rises too much, the cover may be rubbed.

Snap rings provided with refrigerator:

		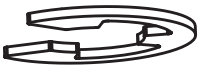	
1 mm	1.5 mm	2 mm	2.5 mm

Operation Guide

Usage of control panel

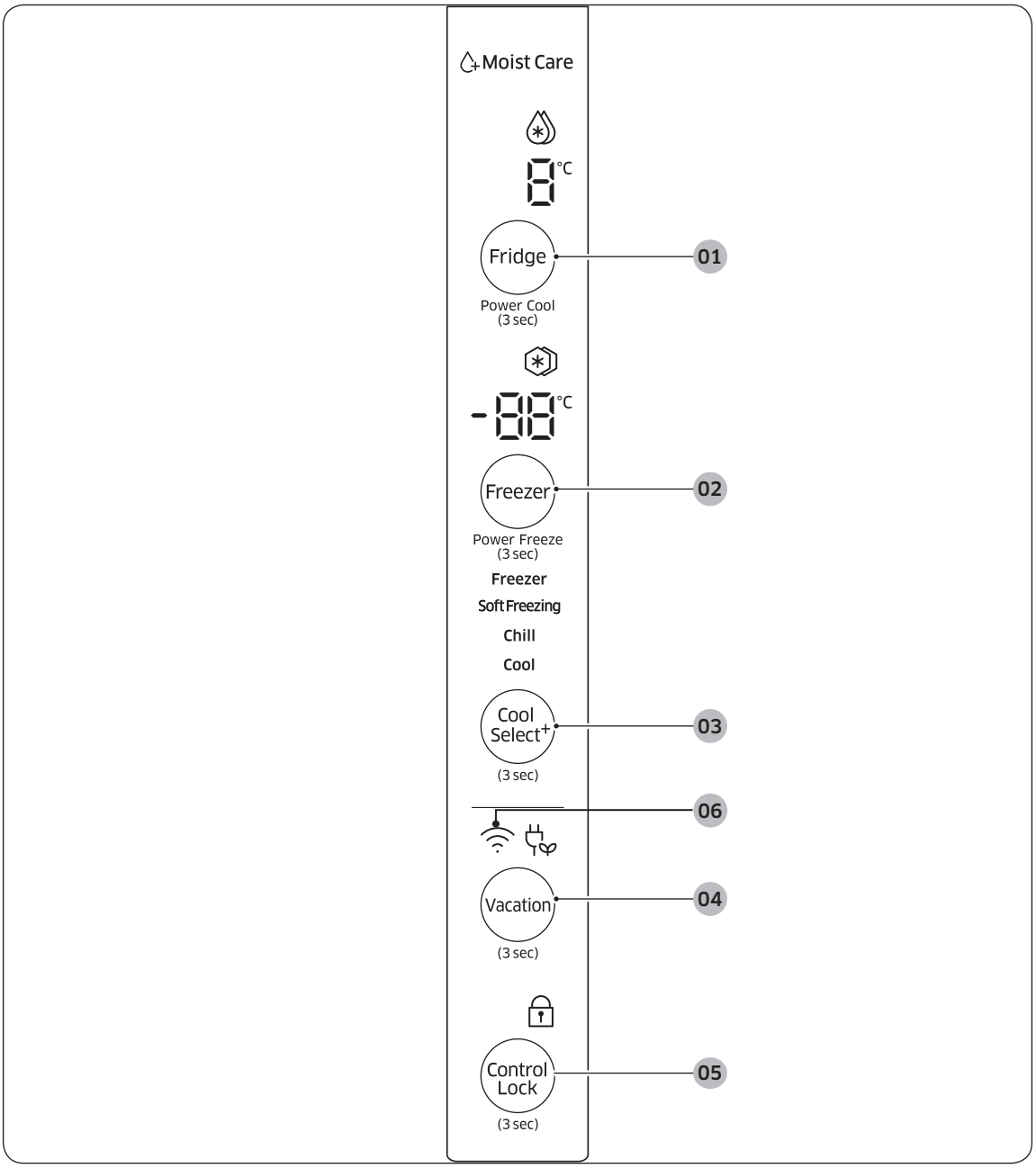

01 fridge/power cool (press 3 seconds)
02 freezer/power freeze (press 3 seconds)
03 cool select+ (press 3 seconds)
04 Vacation (press 3 seconds)
05 control lock (press 3 seconds)
06 Network connection

01 Fridge/power cool (press 3 seconds)	Button of the fridge has two purposes: - Set the temperature of the fridge as you required. - Open/close the power cool function. 1. To set the temperature of the fridge, lightly touch the fridge button. You may set the temperature as any value between 7°C and 1°C. When the holiday function is operating, adjust the temperature of the freezer and the function will be disabled when the icon of the holiday function turns off. 2. Lightly touch the fridge button for 3 seconds to enter/exit the power cool function, under which, it will take less time to cool the food in the fridge. In you need to cool the perishable food rapidly, or if the temperature of the fridge rises rapidly (for example, if the refrigerator door is not closed), this function will be very useful.
02 Freezer/power freeze (press 3 seconds)	Button of the freezer has two purposes: - Set the temperature of the freezer as you required. - Open/close the power freeze function. 1. To set the temperature of the freezer, lightly touch the freezer button. You may set the temperature as any value between -14°C and -23°C. 2. Lightly touch the freezer button for 3 seconds to enter/exit the power freeze function, under which, it will take less time to cool the food in the freezer. In you need to freeze the perishable food rapidly, or if the temperature of the freezer rises rapidly (for example, if the refrigerator door is not closed), this function will be very useful. When using this function, more energy will be consumed. Please remember when not needed, close this function and set the temperature of the freezer to the original one. If large quantity of food needs to be frozen, start the power freeze function 20 hours in advance. Power freeze function will exit after it continuously operates 50 hours and the freezer will be controlled as the current setting temperature.
03 Cool select+ (press 3 seconds)	Lightly touch and press the “interchangeable temperature chamber” key for 3 seconds, release it when you see the function of current interchangeable temperature chamber flash and hear the prompt tone to enter the interchangeable temperature chamber adjustment mode. Then lightly touch the “interchangeable temperature chamber” key to select the four statuses including “freezing”, “dry and fresh”, “ecologically fresh” and “refrigeration”. The selected function will be flashing, which will stop 10 seconds after the operation stops and the setup will be successful.
04 Vacation (press 3 seconds)	Lightly touch the "holiday function" key for 3 seconds to enter/exit the holiday function mode. If you are going to take a vacation or do not need to use the refrigerator, you may select the holiday function mode. Then, the fridge will be closed, the temperature display of the fridge will be off and the icon of the holiday function will be lighted; if the power cool is operating, then the fas refrigerating function will exit and the icon of power cool will be off. When the holiday function is selected, it is highly suggested to take the food of the fridge out and not open the refrigerator door. The room shall be cool to avoid foreign flavor when the fridge is not used for a long time.

05 Control lock (press 3 seconds)	Lightly touch the control lock for 3 seconds to enter/exit the control lock mode. When the control lock function is started, the control lock icon will be lighted and all buttons on the display panel will be locked. When the control lock function is closed, the control lock icon will be off and all buttons on the display panel will be unlocked.
06 Network connection	You may control and monitor your refrigerator via the Samsung smart home applications by using WiFi adapter (separately sold). For more information on Samsung smart home, please see this page.

Note

- Recommended encryption systems include WPA/TKIP and WPA2/AES. Any newer or unstandardized Wi-Fi authentication protocols are not supported..
- Wireless networks may be affected by the surrounding wireless communication environment.
- If your Internet service provider has registered the MAC address of your PC or modem for identification, your Samsung Smart Refrigerator may fail to connect to the Internet. If this happens, contact your Internet service provider for technical assistance.
- The firewall settings of your network system may prevent your Samsung Smart Refrigerator from accessing the Internet. Contact your Internet service provider for technical assistance. If this symptom continues, contact a local Samsung service center or retailer.
- To configure the wireless access point (AP) settings, see the user manual of the AP.
- Samsung Smart Refrigerators featuring the Samsung Smart Home Dongle support both Wi-Fi 2.4 GHz with IEEE 802.11 b/g/n and Soft-AP protocols (IEEE 802.11 n is recommended).
- Unauthorized Wi-Fi wireless routers may fail to connect to applicable Samsung Smart Refrigerators.

Samsung Smart Home (applicable models only)

Installation

Visit the Google Play Store or Apple App Store and search for “Samsung Smart Home”.Download and install the Samsung Smart Home app provided by Samsung Electronics to your smart device.

Note

- The Samsung Smart Home app is designed for Android 4.0 (ICS) or higher, or iOS 7.0 or higher, and is optimized for Samsung smartphones (Galaxy S and Galaxy Note series). On other smartphone models, some functions may operate differently.
- For improved performance, the Samsung Smart Home app is subject to change without notice, or discontinued support according to the manufacturer's policy.

Samsung account

You are required to register your Samsung account to use the app. If you don't have a Samsung account, follow the app's onscreen instructions to create a free Samsung account.

Getting started

1. Insert the provided Wi-Fi Dongle into the corresponding port of your smartphone.
2. Log into your Samsung account. iPhone users are required to provide the login information each time they access the app.
3. Run the Samsung Smart Home app and access Device. Tap "+" and select the refrigerator that you want to connect to.
4. Follow the onscreen instructions to provide the necessary information about the router, and then tap Next.
5. Press and hold Fridge for 5 seconds. Easy Connection starts to register your refrigerator with the "AP" message on the display.
   - The freezer mode will be deactivated by pressing the button for 3 seconds. However, we recommend pressing the button for 5 seconds to be sure.
6. When the device registration is complete, the refrigerator icon will appear on the Samsung Smart Home app.
7. Tap the refrigerator icon to open the refrigerator page.
8. When a network connection is established, the Wi-Fi icon lights up on your refrigerator.

Refrigerator app

Integrated control

You can monitor and control your refrigerator at home as well as while on the move.

- Tap the refrigerator icon on the Samsung Smart Home to open the refrigerator page.
- Check the operation status or notification of your refrigerator, and change options or settings if necessary.

Note

- Some options or settings of the refrigerator may not be available for remote control.

Operation Guide

Key features

Register Samsung smart home appliances to the Samsung Smart Home server for remote access.

Menu overview

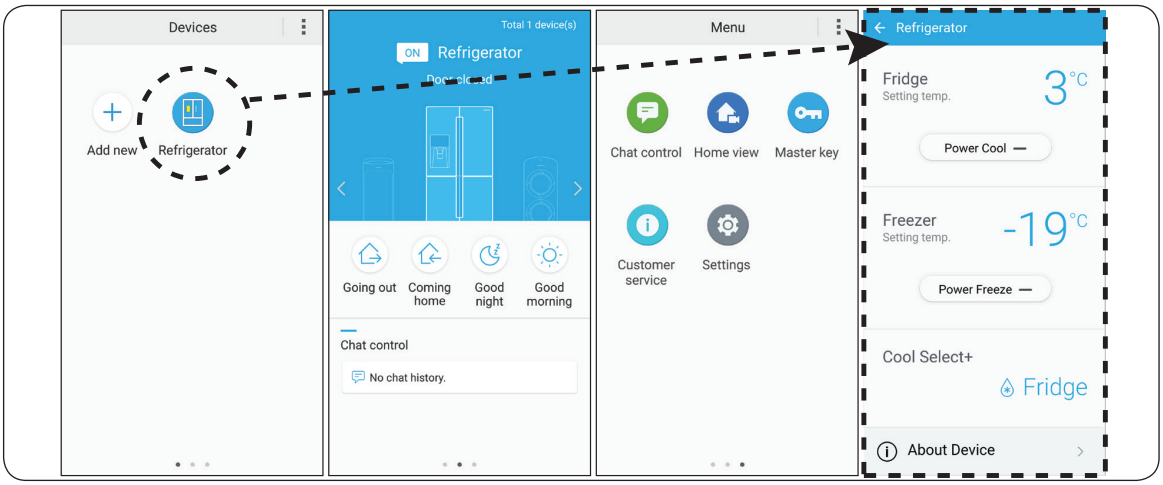

- Tap Refrigerator to open the settings page of the refrigerator.
- Swipe to move to the next page.

Chat control	You can control your Samsung smart home appliances remotely, or check the operating status.
House view	By using the built-in camera of a Samsung smart home appliance, you can monitor your living room. This is available only with applicable models.
Master key	The master key is designed to control the locking system for different user activities such as going out, coming home, going to bed at night, and waking up in the morning. This is available only with applicable models.
Customer service	The user manual is downloadable, and the contact information for customer support is also provided.
Setting	You can check the connected device as well as the software information (version and open-source licenses), and add devices or select a country. You can simulate the operation of the current device for demonstration purposes.

Refrigerator setting

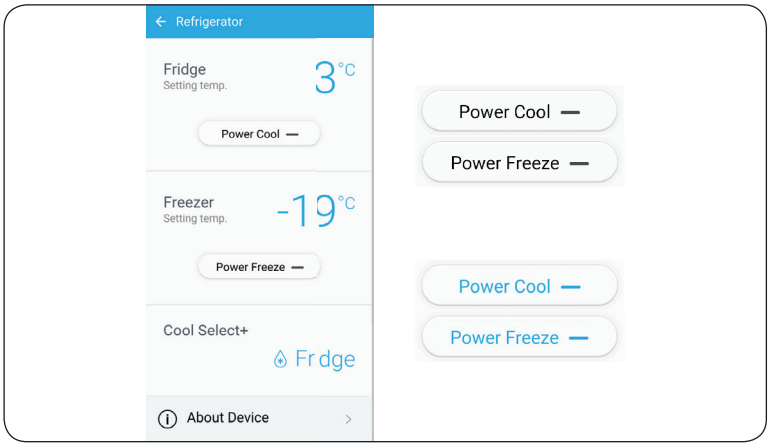

A: Disabled (black)

B: Enabled (blue)

Fridge	01 Displays the currently set fridge temperature. 02 You can turn on or off Power Cool, and check the current settings.
Freezer	03 Displays the currently set freezer temperature. 04 You can turn on or off Ice Maker, and check the ice making status with the current settings.
Cool select+	05 Displays the current mode setting.
About Device	06 Displays the product information including the current version, tutorial, Self Check, and Help Desk. The user manual is downloadable, and the contact information for customer support is also provided. Self Check By referencing Self Check, you can check the diagnostic results of your refrigerator. If you encounter an abnormal symptom,Self Check displays an information that can be used for customer service.

Operation Guide

Components and functions (RF50K59** Series)

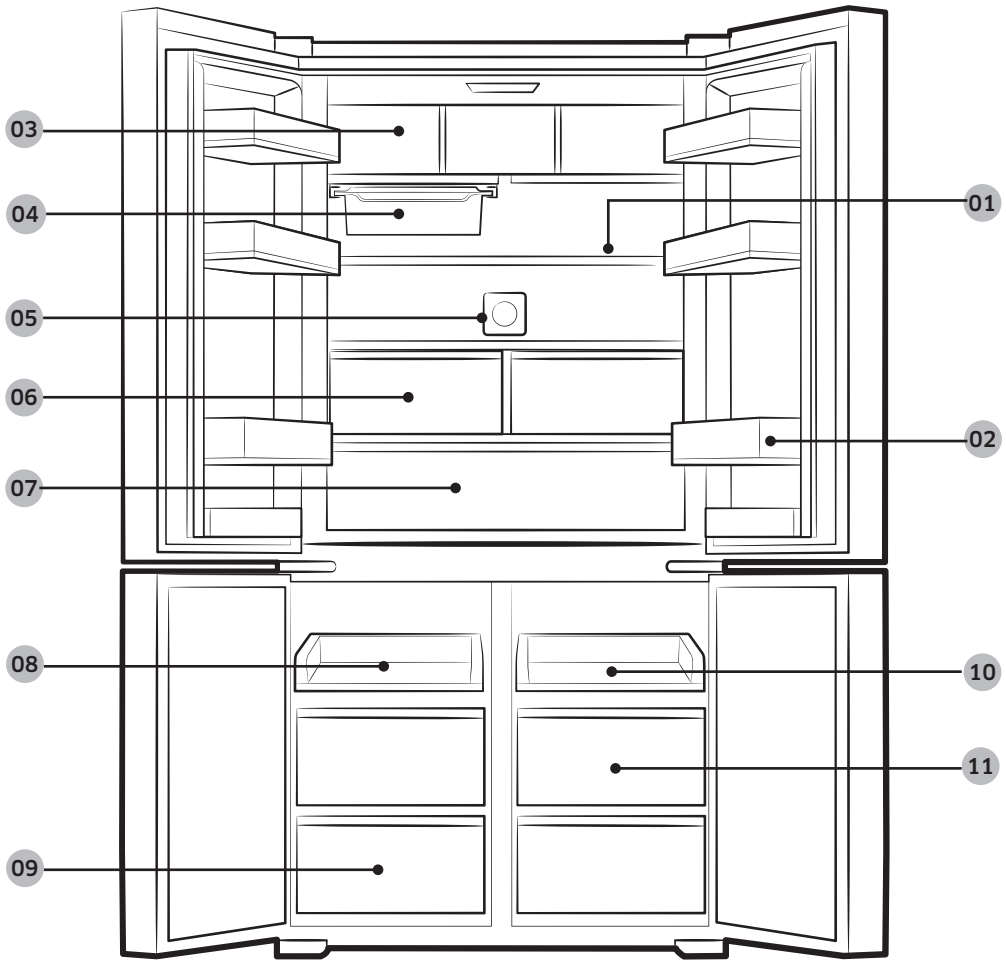

01 Fridge shelf	Applicable to storing the general type of food for refrigerating.
02 Fridge guard	Applicable to storing mineral water, milk, fruit juice and other types of beverage. Also applicable to storing dry noodles, beef jerk and other dehydrated food.
03 Storage box (optional)	Applicable to storing bulk food.
04 Moving tray (optional)	Applicable to storing the food with foreign flavor or easy to absorb flavor. (Place in the interchangeable temperature chamber when leaving the factory)
05 Active fresh keeper (optional)	Be able to restrain the foreign flavor of the fridge effectively.
06 Refrigerating drawer	Applicable to storing the general type of food for refrigerating.
07 Fresh zone	Applicable to storing the general type of food for refrigerating.
08 Easy slide	Applicable to storing the general type of food for freezing.
09 Full open box	Applicable to storing the food to be frozen.
10 Easy slide **11** Full open box	Store food in line with the current setting of the cool select+. Freezing: Store the general type of food to be frozen. Dry and fresh: Store the food to be dried. Ecologically fresh: Store the food to be kept fresh. Freezing: Store the general type of food to be refrigerated.

⚠ Warning

- If you plan to go out for a long time, please empty the refrigerator and cut off the power source. Wipe up the remaining water in the refrigerator and keep the refrigerator door open.
  - This is conductive to removing the foreign flavor and prevent mold.
- If the refrigerator is not in use for a long time, please plug the power plug out.
  - Damage of the insulating layer of the power line may cause fire disaster.
- Please do not change the allocation way of the shelves.
  - Change of the allocation way of the shelves may damage the refrigerator door.
- When the Moving tray is used in the freezer or cool select+, please do not store water or other liquid.
  - This may prevent it from breaking and leaking water due to the freeze of water or other liquid.
- The mobile enclosed box shall not be put in the microwave oven and toaster.
- In order to ensure safety of the storage box in the process of transportation, it will be placed in the opposite direction upon when leaving the factory, so prior to use, please remove the package and rotate 180°.
- The dry food may be affected with damp if stored in the mobile enclosed case or mobile enclosed tray of the refrigerating chamber (or interchangeable temperature chamber with refrigerating function).

Operation Guide

Components and functions (RF50K58** Series)

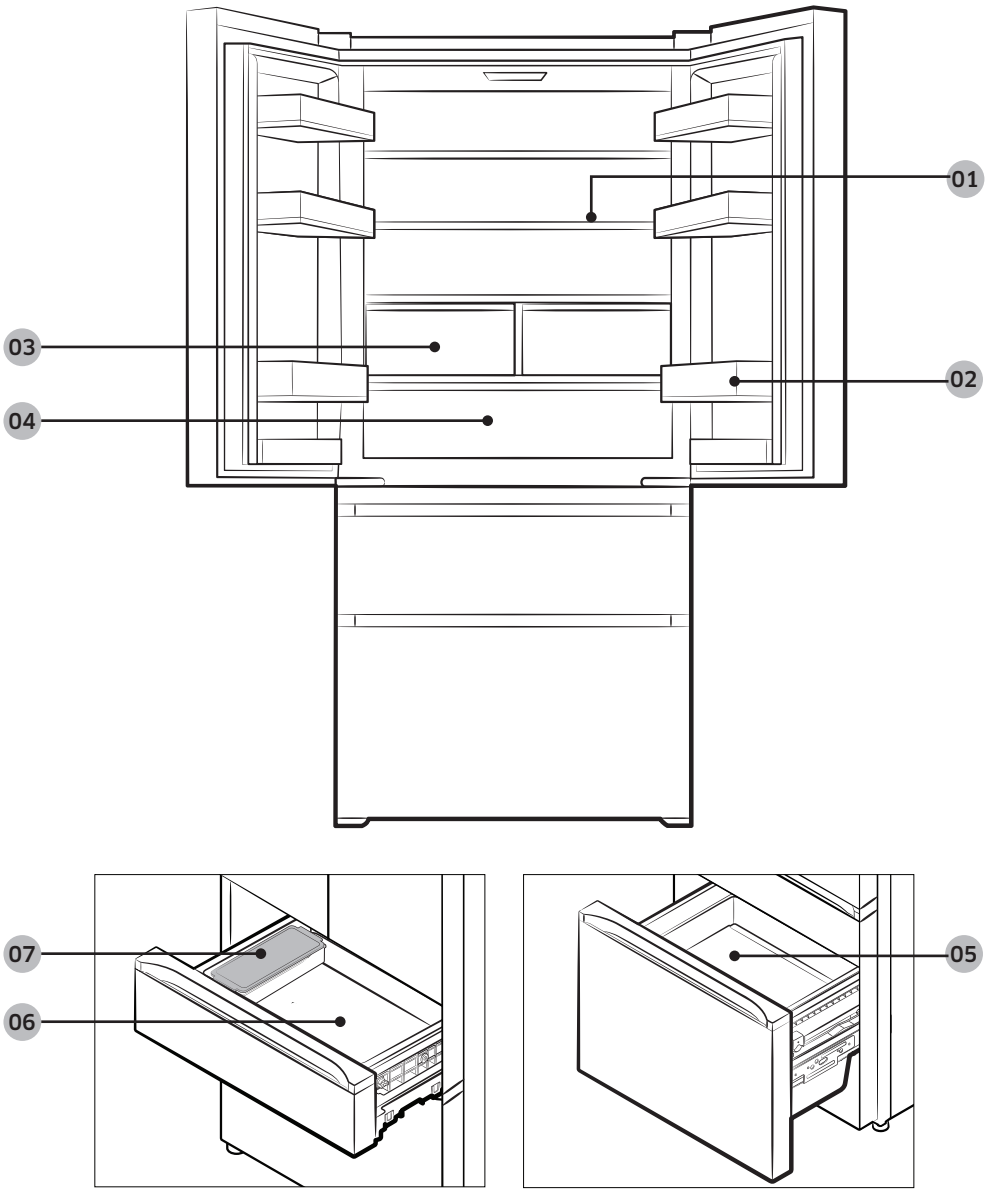

01 Refrigerating chamber shelf	Applicable to storing the general type of food for refrigerating.
02 Refrigerating chamber bottle holder	Applicable to storing mineral water, milk, fruit juice and other types of beverage. Also applicable to storing dry noodles, beef jerk and other dehydrated food.
03 Refrigerating drawer	Applicable to storing the general type of food for refrigerating.
04 Fresh low-temperature zone	Applicable to storing the general type of food for refrigerating.
05 Freezing chamber drawer	Applicable to storing the food to be frozen.
06 Interchangeable temperature chamber drawer **07** Mobile enclosed tray	Store food in line with the current setting of the interchangeable temperature chamber. Freezing: Store the general type of food to be frozen. Dry and fresh: Store the food to be dried. Ecologically fresh: Store the food to be kept fresh. Freezing: Store the general type of food to be refrigerated.

⚠ Warning

- If you plan to go out for a long time, please empty the refrigerator and cut off the power source. Wipe up the remaining water in the refrigerator and keep the refrigerator door open.
- This is conductive to removing the foreign flavor and prevent mold.
- If the refrigerator is not in use for a long time, please plug the power plug out.
- Damage of the insulating layer of the power line may cause fire disaster.
- Please do not change the allocation way of the shelves.
- Change of the allocation way of the shelves may damage the refrigerator door.
- When the mobile enclosed box is used in the freezing chamber or interchangeable temperature chamber, please do not store water or other liquid.
- This may prevent it from breaking and leaking water due to the freeze of water or other liquid.
- The mobile enclosed box shall not be put in the microwave oven and toaster.
- When opening or closing the drawers of the freezing chamber or interchangeable temperature chamber, do not contact the metal guides at the two sides, which may hurt your hand.
- The dry food may be affected with damp if stored in the mobile enclosed case or mobile enclosed tray of the refrigerating chamber (or interchangeable temperature chamber with refrigerating function).

Operation Guide

Control Temperature

Basic temperature of the fridge

The initial power up temperature of the fridge is 3°C; the temperature may be adjusted by pressing the temperature key in the fridge as the following order:
3°C→2°C→1°C→7°C→6°C→5°C→4°C→3°C

Basic temperature of the freezer

The initial power up temperature of the freezer is -19°C; the temperature may be adjusted by pressing the temperature key in the freezer as the following order:
-19°C→-20°C→-21°C→-22°C→-23°C→-14°C
→-15°C→-16°C→-17°C→-18°C→-19°C

Setting of the cool select+

The interchangeable temperature chamber has four function selections in total. Press the interchangeable temperature chamber key for 3 seconds and release it when you see the function of current interchangeable temperature chamber flash and hear the prompt tone. Then press the interchangeable temperature chamber keys one by one to switch the functions of the interchangeable temperature chamber. Select the needed function (the selected function will always flash) and the flash will stop 10 seconds after the operation stops and the setup will be successful.

The switch sequence is shown below:

Freezing→dry and fresh→ecologically fresh→refrigerating→freezing

The general temperature of the various functions of the cool select+ is show below:

- Freezer:
  RF50K58** Series:
  When the temperature variation is adjusted as “freezing” function, it is suggested to use it as two-star freezing;
  When the temperature variation is adjusted as “freezing” function, it is suggested to adjust the freezing chamber under the temperature lower than as -21°C.
  (To ensure freezing effect of the interchangeable temperature chamber, the temperature of the freezing chamber will be slightly low, which is normal.)
  RF50K59** Series:
  The setting temperature of the interchangeable temperature chamber and freezing chamber.
  The setting temperature of the cool select+ and freezer.
- Soft freezing : About -5°C

- Chill: About -1°C
- Cool: About 3°C

Note

- Before put food in the cool select+, please confirm current setting functions, an then select the appropriate function based on the food put in.

Note

- If open or close the door too frequently or store a large quantity of warm food, the temperature may rise.
- This may cause the digital display to flash. Once the temperature of the freezer and fridge is back to the normal setting value, the flash will stop.
- If the flash continues, it may be necessary to "reset" the refrigerator setting. Try to plug the power plug of the refrigerator out and re-plug the power plug in after about 10 minutes.
- In order to achieve the best energy saving effect, 10 seconds after operating the refrigerator, except for the function display, others will be off and re-lighted if it is operated again.
- In case of ice making, in order to speed up the ice-making process, it is suggested to take the ice cube tray out from the ice storage box and horizontally put it in the right front part of the upper drawer, which is conductive for the cool air to directly act on the ice box so as to accelerate the ice-making process.
- When a large quantity of frozen food is put, please select the "power freeze" function.

Usage of the ice-making box

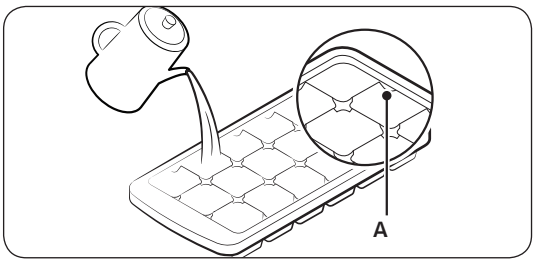

□ Ice making: Add water to the ice cube tray to the highest water level A.

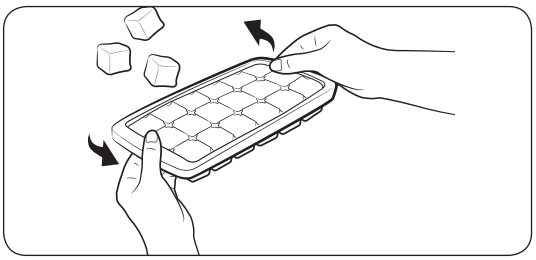

□ Take the ice out: Hold two sides of the ice cube tray and then writhe it to make the ice cakes fall off.

Dismantle the refrigerator accessories

1. Shelf

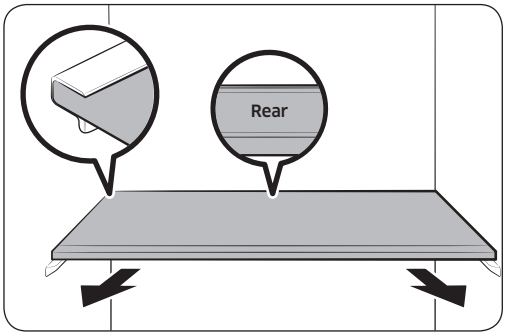

□ To dismantle the shelf, completely open the refrigerator door, lift upwards and push the shelf out.

⚠ Caution

- Please note that prior to inserting the shelf, do not inverse it or install in in the opposite direction.

Note

- When you put the shelf back ,ensure the side with "Rear" label is put inward.

2. Bottle rack

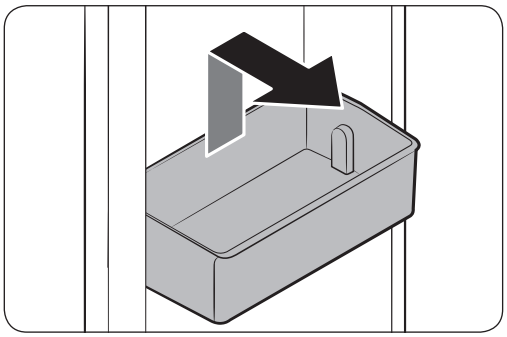

□ Hold the door shelf with both hands and then lightly lift to remove it.

3. Drawer

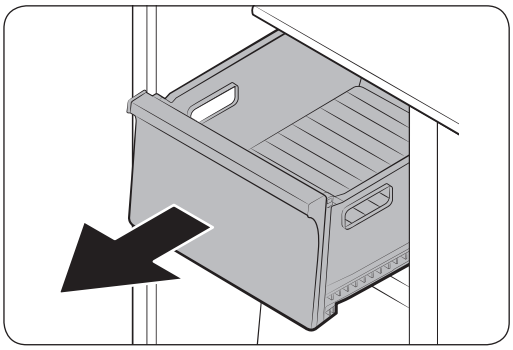

RF50K59** Series

- Pull the drawer out, lightly lift upwards and take the drawer out..

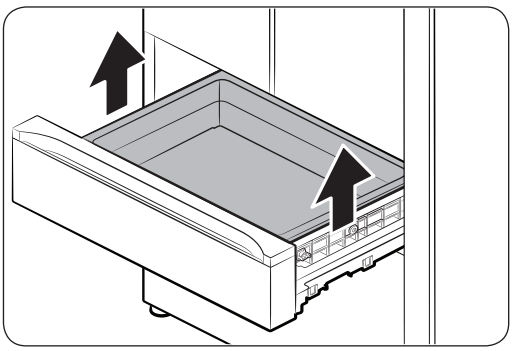

RF50K58** Series

- Completely push the door the drawer inside out together, then lift the drawer outward, push it outward a little, and take the entire drawer out.

4. Mobile enclosed box

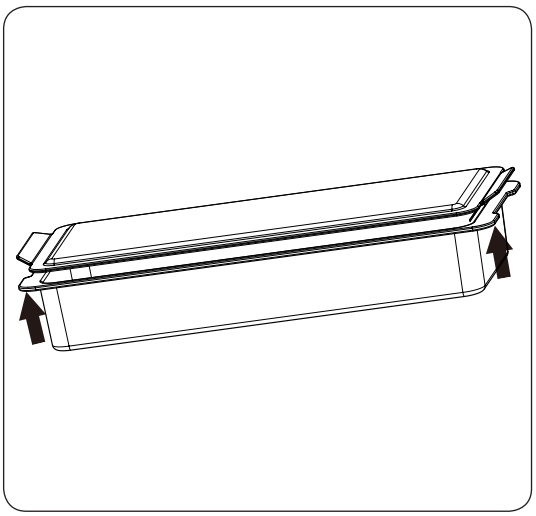

- Push the door and drawer outward to the locking position, an then lift the front part of the mobile enclosed box a little to take them out.

Note

- When taking the mobile enclosed box out, please do not directly lift the handle at both sides of the cover with both hands, you shall lift the supporting part of the two sides (as shown in the figure); otherwise, the box may fall off and be broken when the box has weight in it due to the separation of the cover and the box.
- Please do not put water or other liquid in the mobile enclosed box because it may be cracked due to the expansion of water or liquid freezing.

5. Folded shelf (optional)

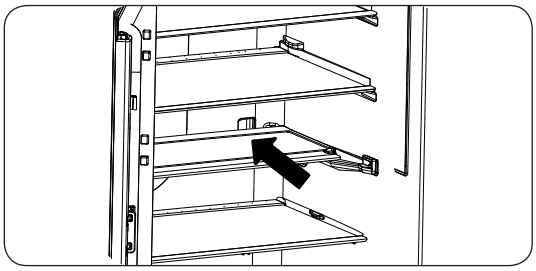

- □ Lift the front part of the shelf slightly, and then push it forward to make the glass fall off;
- □ Then push it backward to the end;
- □ Hold the overlapped front section of the shelf, lift it upward and then take the folded shelf out.

Clean the refrigerator

⚠ Warning

- Please do not clean the refrigerator with benzene, diluent, Clorox product or car cleaner. Otherwise, this may damage the outside surface of the refrigerator and cause fire disaster.
- Please do not flush the refrigerator with water when the power is on. This may cause electric shock.
  Please clean the refrigerator as the following steps:

1. Plug the power plug of the refrigerator out.

2. Wipe with a slightly wet lint-free soft cloth or tissue.

Note

- Please do not clean the refrigerator with any cleaner because this may cause color fading or damage of the refrigerator.
- Do not put your hand to the bottom of the refrigerator.
  - Any sharp edges may cause personal injury.
- Do not clean the plug or the foreign matters or dust at the plug with wet cloth.
  - Otherwise, there will be the hazard of fire disaster.

3. Wipe inside and outside of the refrigerator clean.

4. Re-plug the power plug of the refrigerator in.

Change internal lights

LED lights in the fridge/freezer/cool select+

- If the LED light cover is contaminated with foreign matters, the LED light will dim. Please use a clean cloth to wipe the surface of the light cover so as to fully give out the luminance.

⚠ Warning

- Please do not dismantle or change the LED light by yourself. In case of changing the LED light, please contact Samsung service center or the distributor authorized by Samsung.

Note

- If you try to change the LED light by yourself, there will be the danger of electric shock or serious personal injury.

Change of active fresh keeper (optional)

- The active fresh keeper shall not be changed by yourself. Please contact Samsung customer service center if needed.

Improve refrigerating performance

Note

- If the cold air outlet is obstructed by food, the cold air will not be able to penetrate the entire storage room to effectively freeze the food, which may lower the refrigerating performance.

Precautions on walking beam of the fridge

When the walking beam is in overturn status and the right refrigerating door is closed, the left door will not be able to be closed unless reset the walking beam.

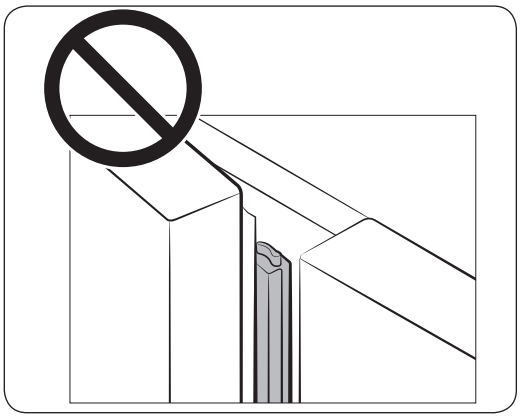

When the walking middle beam is in such status, the door will not be able to be closed normally.

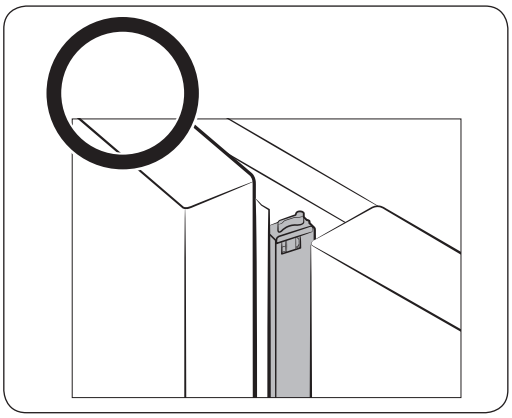

When the walking middle beam is in such status, the door will be able to be closed normally.

Note: In order to avoid condensation, a heater is equipped with the walking beam for heating. It is normal if the middle beam of the walking beam generates heat, which will not influence the refrigerated food.

Fault analysis

Fault diagnosis function

No.	Fault content	Freezer display	Fridge display
1	The sensor of the freezer is abnormal.	1	C/E
2	The sensor of the fridge is abnormal.	2	
3	The defrosting sensor of the freezer is abnormal.	4	
4	The defrosting sensor of the fridge is abnormal.	5	
5	The ambient temperature sensor is abnormal.	6	
6	The sensor of the cool select+ is abnormal.	7	
7	The defrosting sensor of the cool select+ is abnormal.	11	
8	The humidity sensor is abnormal.	13	
9	The fan of the freezer is abnormal.	21	
10	The fan of the fridge is abnormal.	22	
11	The fan of the machine chamber is abnormal.	23	
12	The freezer defrosts abnormally.	24	
13	The electric heating function of the air door is abnormal.	27	
14	The deodorization fan is abnormal.	28	
15	The the cool select+ defrosts abnormally.	29	
16	The fan of the cool select+ is abnormal.	31	
17	The compressor is unable to be started and abnormal.	81	
18	The compressor has abnormal rotating speed.	82	
19	The current of the compressor is tested abnormal.	83	
20	The locked-rotor of the compressor motor is abnormal.	84	
21	The low voltage of the compressor is abnormal.	85	
22	The overvoltage of the compressor is abnormal.	86	

Fault analysis

Problems	Solutions
The refrigerator is unable to work or realize refrigerate completely.	□ Check whether the power plug is connected correctly. □ Check whether the setting temperature on the digital display is lower than the internal temperature of the freezer or fridge. If so, please set the temperature of the freezer or fridge low. □ Can the refrigerator be exposed under direct sunshine or approach the heating source? If so, the refrigerator will be unable to completely cool. Install the refrigerator in a place not exposed under direct sunshine or far away from the heating source. □ Is the back of the refrigerator too close to the wall and the air unable to circulate well? If so, the refrigerator will be unable to completely cool. Keep the refrigerator at an appropriate distance from the wall. □ Is there too much food in the refrigerator and the ventilation hole blocked? In order to keep the refrigerator under an appropriate temperature, please do not put too much food in the refrigerator.
The food in the fridge freezes.	□ Check whether the setting temperature on the digital display is too low. If so, please raise the temperature of the refrigerator. □ Is the temperature of the room too low? Adjust the temperature of the refrigerator high. □ Do you store some food containing a lot of water in the coldest zone or near the cold air outlet of the fridge? Try to move these stuff to other shelves of the fridge but do not put them on the zone or shelf with low temperature.

Fault Analysis

Problems	Solutions
Hear abnormal noise or sound.	□ Check whether the refrigerator is placed steadily. □ Is the back of the refrigerator too close to the wall and the air unable to well ventilate? □ Is there something falling in the back or under the refrigerator? □ If you hear a "crack" sound from the refrigerator, this is normal. Because various accessories will contract or expand as the temperature inside the refrigerator varies. □ If the refrigerator gives out a sound which sounds like some articles are striking with each other inside the refrigerator, this is normal. This sound is caused by the high load of the compressor.
The temperature of the sealing zone of the refrigerator door is high and condensation is produced.	□ Heating is normal to some extent because the anti-dew tube is installed at the edge of the case to prevent the refrigerator from condensing. □ Is the refrigerator door semi-open? When the refrigerator door is open for a long time, condensation may occur.
There is a bubbling sound from the refrigerator.	□ This is normal. The bubbling sound comes from the freezing medium circulated in the refrigerator.
Hear the sound of "tap-tap".	□ This is normal. This is produced by the switch of relay on the mainboard when different electric appliances of the refrigerator are working and switching.
Hear the sound of gear friction.	□ This is normal. This is produced by rotation of the stepping valve when the refrigerating system of the refrigerator switches between different chambers.
There is foreign flavor in the refrigerator.	□ Check the spoiled food. □ The food with a strong smell (such as fish) shall be tightly sealed. □ Regularly clean the refrigerator and throw away the spoiled food or the food to be spoiled.
There is frosting in the wall of the freezer.	□ Is the air ventilation hole blocked? Clean the obstacles to allow the air to freely flow. □ Ensure there is enough room for storing the food to keep well-ventilated. □ Is the drawer of the freezer drawer closed correctly?

Fault analysis of Samsung smart home

Problems	Solutions
Could not find “Samsung Smart Home” on the app market.	□ The Samsung Smart Home app is available on smartphones that run Android 4.0 (ICS) or higher, or iOS 7.0 or higher. □ Tablet computers are not supported.
The Samsung Smart Home app fails to operate.	□ The Samsung Smart Home app is available on applicable models only. □ The old Samsung Smart Refrigerator app cannot connect with Samsung Smart Home models.
The Samsung Smart Home app is installed but is not connected to my refrigerator.	□ You must log into your Samsung account to use the app. □ Make sure that the router operates normally. □ If the Wi-Fi icon turns off, turn it on. □ If the Wi-Fi icon blinks, this indicates that a network connection is not established. Use Easy Connection on the Samsung Smart Home app to connect your refrigerator to the router.
Could not log into the app.	□ You must log into your Samsung account to use the app. □ If you don’t have a Samsung account, follow the app’s onscreen instructions to create one.
Easy Connection fails.	□ Easy Connection may fail due to the distance from the router or electrical interference from the surrounding environment. Wait a moment and try again.
The Samsung Smart Home app is successfully connected to my refrigerator but does not run.	□ Exit and restart the Samsung Smart Home app, or disconnect and reconnect the router. □ Unplug the power cord of the refrigerator, and plug it again after 1 minute.

MEMO

Ambient Room Temperature Limits

This fridge/freezer is designed to operate in ambient temperatures specified by its temperature class marked on the rating plate.

Class	Symbol	Ambient Temperature range(°C)
Extended Temperate	SN	+10 to +32
Temperate	N	+16 to +32
Subtropical	ST	+16 to +38
Tropical	T	+16 to +43

Note :Internal temperatures may be affected by such factors as the location of the fridge/freezer, ambient temperature and the frequency with which you open the door. Adjust the temperature as required to compensate for these factors.

Correct Disposal of This Product
(Waste Electrical & Electronic Equipment)

English

(Applicable in countries with separate collection systems)

This marking on the product, accessories or literature indicates that the product and its electronic accessories (e.g. charger, headset, USB cable) should not be disposed of with other household waste at the end of their working life. To prevent possible harm to the environment or human health from uncontrolled waste disposal, please separate these items from other types of waste and recycle them responsibly to promote the sustainable reuse of material resources.

Household users should contact either the retailer where they purchased this product, or their local government office, for details of where and how they can take these items for environmentally safe recycling.

Business users should contact their supplier and check the terms and conditions of the purchase contract. This product and its electronic accessories should not be mixed with other commercial wastes for disposal.

SAMSUNG

Contact SAMSUNG WORLD WIDE

If you have any questions or comments relating to Samsung products, please contact the SAMSUNG customer care center.

Country	Contact Center	Web Site
EGYPT	08000-7267864 16580	www.samsung.com/eg/support
ALGERIA	3004	www.samsung.com/n_africa/support
IRAN	021-8255 [CE] 021-42132 [HHP]	www.samsung.com/iran/support
SAUDI ARABIA	800 247 3457 (800 24/7 HELP)	www.samsung.com/sa/home www.samsung.com/sa_en
PAKISTAN	0800-Samsung (72678)	www.samsung.com/pk/support
TUNISIA	80 1000 12	www.samsung.com/n_africa/support
U.A.E	800-SAMSUNG (800 - 726 7864)	www.samsung.com/ae/support (English) www.samsung.com/ae_ar/support (Arabic)
OMAN	800-SAMSUNG (800 - 726 7864)	www.samsung.com/ae/support (English) www.samsung.com/ae_ar/support (Arabic)
KUWAIT	183-CALL (183-2255)	www.samsung.com/ae/support (English) www.samsung.com/ae_ar/support (Arabic)
BAHRAIN	8000-GSAM (8000-4726)	www.samsung.com/ae/support (English) www.samsung.com/ae_ar/support (Arabic)
QATAR	800-CALL (800-2255)	www.samsung.com/ae/support (English) www.samsung.com/ae_ar/support (Arabic)
TURKEY	444 77 11	www.samsung.com/tr/support
JORDAN	0800-22273 06 5777444	www.samsung.com/levant
SYRIA	962 5777444	www.samsung.com/levant
LEBANON	961 1484 999	www.samsung.com/levant
IRAQ	964 77 261 72220 964 75 118 92525	www.samsung.com/levant
MOROCCO	080 100 22 55	www.samsung.com/n_africa/support

DA68-03416C