Features of your new air conditioner

Cool Summer Offer

On those hot sweltering summer days and long restless nights, there is no better escape from the heat than the cool comforts of home. Your new air conditioner brings an end to exhausting hot summer days and lets you rest. This summer, beat the heat with your own air conditioner.

Flexible installation

Duct type air conditioner is designed to be slimmer and offers different solutions for any shape room allowing for specific air flow requirements. Also, the air intake can be set up on either the bottom or rear of the unit, so there is more flexibility in installation.

Contents

Safety precautions 3
Checking before use 9
Viewing the parts 10
Cleaning and maintaining the air conditioner 11
Appendix 17

Correct Disposal of This Product
(Waste Electrical & Electronic Equipment)

(Applicable in the countries with separate collection systems)

This marking on the product, accessories or literature indicates that the product and its electronic accessories (e.g. charger, headset, USB cable) should not be disposed of with other household waste at the end of their working life. To prevent possible harm to the environment or human health from uncontrolled waste disposal, please separate these items from other types of waste and recycle them responsibly to promote the sustainable reuse of material resources.

Household users should contact either the retailer where they purchased this product, or their local government office, for details of where and how they can take these items for environmentally safe recycling.

Business users should contact their supplier and check the terms and conditions of the purchase contract. This product and its electronic accessories should not be mixed with other commercial wastes for disposal.

Safety precautions

Before using your new air conditioner, please read this manual thoroughly to ensure that you know how to safely and efficiently operate the extensive features and functions of your new appliance.

Because the following operating instructions cover various models, the characteristics of your air conditioner may differ slightly from those described in this manual. If you have any questions, call your nearest contact center or find help and information online at www.samsung.com.

ENGLISH

Important safety symbols and precautions:

WARNING	Hazards or unsafe practices that may result in **severe personal injury or death.**
CAUTION	Hazards or unsafe practices that may result **in minor personal injury or property damage.**
	Follow directions.
	Do NOT attempt.
	Make sure the machine is grounded to prevent electric shock.
	Unplug the power plug from the wall socket.
	Do NOT disassemble.

FOR INSTALLATION

WARNING

Use the power line with the power specifications of the product or higher and use the power line for this appliance only. In addition, do not use an extension line.

- ▶ Extending the power line may result in electric shock or fire.
- ▶ Do not use an electric transformer. It may result in electric shock or fire.
- ▶ If the voltage/frequency/rated current condition is different, it may cause fire.

The installation of this appliance must be performed by a qualified technician or service company.

- ▶ Failing to do so may result in electric shock, fire, explosion, problems with the product, or injury.

Install a switch and circuit breaker dedicated to the air conditioner.

- ▶ Failing to do so may result in electric shock or fire.

Fix the outdoor unit firmly so that the electric part of the outdoor unit is not exposed.

- ▶ Failing to do so may result in electric shock or fire.

Safety precautions

FOR INSTALLATION

WARNING

Do not install this appliance near a heater, inflammable material. Do not install this appliance in a humid, oily or dusty location, in a location exposed to direct sunlight and water (rain drops). Do not install this appliance in a location where gas may leak.

- ▶ This may result in electric shock or fire.

Never install the outdoor unit in a location such as on a high external wall where it could fall.

- ▶ If the outdoor unit falls, it may result in injury, death or property damage.

This appliance must be properly grounded. Do not ground the appliance to a gas pipe, plastic water pipe, or telephone line.

- ▶ Failure to do so may result in electric shock, fire, an explosion, or other problems with the product.
- ▶ Never plug the power cord into a socket that is not grounded correctly and make sure that it is in accordance with local and national codes.

FOR INSTALLATION

CAUTION

Install your appliance on a level and hard floor that can support its weight.

- ▶ Failing to do so may result in abnormal vibrations, noise, or problems with the product.

Install the draining hose properly so that water is drained correctly.

- ▶ Failing to do so may result in water overflowing and property damage.

When installing the outdoor unit, make sure to connect the draining hose so that draining is performed correctly.

- ▶ The water generated during the heating operation by the outdoor unit may overflow and result in property damage.
  In particular, in winter, if a block of ice falls, it may result in injury, death or property damage.

FOR POWER SUPPLY

WARNING

When the circuit breaker is damaged, contact your nearest service center.

Do not pull or excessively bend the power line. Do not twist or tie the power line. Do not hook the power line over a metal object, place a heavy object on the power line, insert the power line between objects, or push the power line into the space behind the appliance.

- ▶ This may result in electric shock or fire.

FOR POWER SUPPLY

CAUTION

When not using the air conditioner for a long period of time or during a thunder/ lightning storm, cut the power at the circuit breaker.

- ▶ Failing to do so may result in electric shock or fire.

FOR USING

WARNING

If the appliance is flooded, please contact your nearest service center.

- ▶ Failing to do so may result in electric shock or fire.

If the appliance generates a strange noise, a burning smell or smoke, unplug the power plug immediately and contact your nearest service center.

- ▶ Failing to do so may result in electric shock or fire.

In the event of a gas leak (such as propane gas, LP gas, etc.), ventilate immediately without touching the power line.
Do not touch the appliance or power line.

- ▶ Do not use a ventilating fan.
- ▶ A spark may result in an explosion or fire.

To reinstall the air conditioner, please contact your nearest service center.

- ▶ Failing to do so may result in problems with the product, water leakage, electric shock, or fire.
- ▶ A delivery service for the product is not provided. If you reinstall the product in another location, additional construction expenses and an installation fee will be charged.
- ▶ Especially, when you wish to install the product in an unusual location such as in an industrial area or near the seaside where it is exposed to the salt in the air, please contact your nearest service center.

FOR USING

WARNING

Do not touch the circuit breaker with wet hands.

▶ This may result in electric shock.

Do not strike or pull the air conditioner with excessive force.

▶ This may result in fire, injury, or problems with the product.

Do not place an object near the outdoor unit that allows children to climb onto the machine.

▶ This may result in children seriously injuring themselves.

Do not turn the air conditioner off with the circuit breaker while it is operating.

▶ Turning the air conditioner off and then on again with the circuit breaker may cause a spark and result in electric shock or fire.

After unpacking the air conditioner, keep all packaging materials well out of the reach of children, as packaging materials can be dangerous to children.

▶ If a child places a bag over its head, it may result in suffocation.

Do not insert your fingers or foreign substances into the outlet when the air conditioner is operating or the front panel is closing.

▶ Take special care that children do not injure themselves by inserting their fingers into the product.

Do not insert your fingers or foreign substances into the air inlet/outlet of the air conditioner.

▶ Take special care that children do not injure themselves by inserting their fingers into the product.

Do not use this air conditioner for long periods of time in badly ventilated locations or near infirm people.

▶ Since this may be dangerous due to a lack of oxygen, open a window at least once an hour.

FOR USING ⚠ WARNING

If any foreign substance such as water has entered the appliance, cut the power by unplugging the power plug and turning the circuit breaker off and then contact your nearest service center.

▶ Failing to do so may result in electric shock or fire.

Do not attempt to repair, disassemble, or modify the appliance yourself.

▶ Do not use any fuse (such as cooper, steel wire, etc.)other than the standard fuse.

▶ Failing to do so may result in electric shock, fire, problems with the product, or injury.

FOR USING ⚠ CAUTION

Do not place objects or devices under the indoor unit.

▶ Water dripping from the indoor unit may result in fire or property damage.

Check that the installation frame of the outdoor unit is not broken at least once a year.

▶ Failing to do so may result in injury, death or property damage.

Max current is measured according to IEC standard for safety and current is measured according to ISO standard for energy efficiency.

Do not stand on top of the appliance or place objects (such as laundry, lighted candles, lighted cigarettes, dishes, chemicals, metal objects, etc.) on the appliance.

▶ This may result in electric shock, fire, problems with the product, or injury.

Do not operate the appliance with wet hands.

▶ This may result in electric shock.

Do not spray volatile material such as insecticide onto the surface of the appliance.

▶ As well as being harmful to humans, it may also result in electric shock, fire or problems with the product.

Do not drink the water from the air conditioner.

▶ The water may be harmful to humans.

Do not apply a strong impact to the remote controller and do not disassemble the remote controller.

Do not touch the pipes connected with the product.

▶ This may result in burns or injury.

Safety precautions

FOR USING

⚠ **CAUTION**

Do not use this air conditioner to preserve precision equipment, food, animals, plants or cosmetics, or for any other unusual purposes.

▶ This may result in property damage.

Avoid directly exposing humans, animals or plants from the air flow from the air conditioner for long periods of time.

▶ This may result in harm to humans, animals or plants.

This appliance is not intended for use by persons (including children) with reduced physical, sensory or mental capabilities, or lack of experience and knowledge, unless they have been given supervision or instruction concerning use of the appliance by a person responsible for their safety. Children should be supervised to ensure that they do not play with the appliance.

FOR CLEANING

⚠ **WARNING**

Do not clean the appliance by spraying water directly onto it. Do not use benzene, thinner or alcohol to clean the appliance.

▶ This may result in discoloration, deformation, damage, electric shock or fire.

Before cleaning or performing maintenance, unplug the air conditioner from the wall socket and wait until the fan stops.

▶ Failing to do so may result in electric shock or fire.

FOR CLEANING

⚠ **CAUTION**

Take care when cleaning the surface of the heat exchanger of the outdoor unit since it has sharp edges.

▶ To avoid cutting your fingers, wear thick cotton gloves when cleaning it.

Do not clean the inside of the air conditioner by yourself.

▶ For cleaning inside the appliance, contact your nearest service center.

▶ When cleaning the internal filter, refer to the descriptions in the 'Cleaning and maintaining the air conditioner' section.

▶ Failure to do may result in damage, electric shock or fire.

Checking before use

Operation ranges

The table below indicates the temperature and humidity ranges the air conditioner can be operated within.
Refer to the table for efficient use.

MODE	OUTDOOR TEMPERATURE	INDOOR TEMPERATURE	INDOOR HUMIDITY
COOLING	21°C to 54°C	21°C to 32°C	80% or less
DRYING	21°C to 54°C	21°C to 32°C	

NOTE
- If the cooling operation is used at over 32˚C/90˚F (indoor temperature), it does not cool at its full capacity.

CAUTION
- The use of the air conditioner at a relative humidity above the expected one (80%) may cause the formation of condensate and the leakage of water drops on the floor.

Tips on using air conditioner

Here are some tips that you would follow when using your air conditioner.

TOPIC	RECOMMENDATION
Cooling	• If current outside temperatures are much higher than the selected indoor temperature, it may take time to bring the inner temperature to the desired coolness. • Avoid drastically turning down the temperature. Energy is wasted and the room does not cool faster.
Power failure	• If a power failure occurs during the operation of the air conditioner, the operating immediately stops and unit will be off. When power returns, the air conditioner will run automatically.
Protection mechanism	• If the air conditioner has just been turned on after operation stops or being plugged in, cool air does not come out for 3 minutes to protect the compressor of the outdoor unit.

Viewing the parts

Congratulations on the purchase of the air conditioner. We hope you enjoy the features of your air conditioner and stay cool with optimal efficiency.
Please read the user manual to get started and to make the best use of the air conditioner.

NOTE
- Only Slim Duct/MA Duct type/Global Duct products are supplied with the filter.

SLIM DUCT TYPE

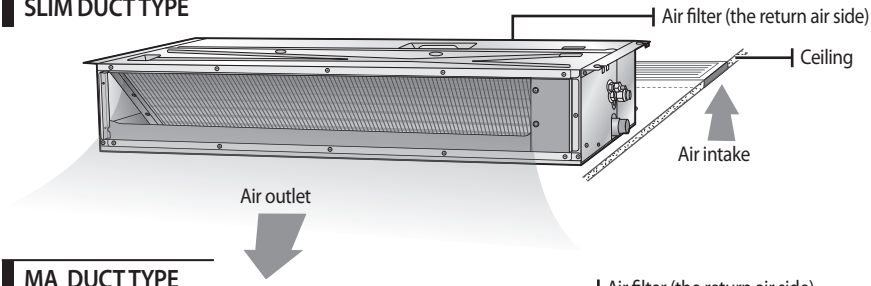

MA DUCT TYPE

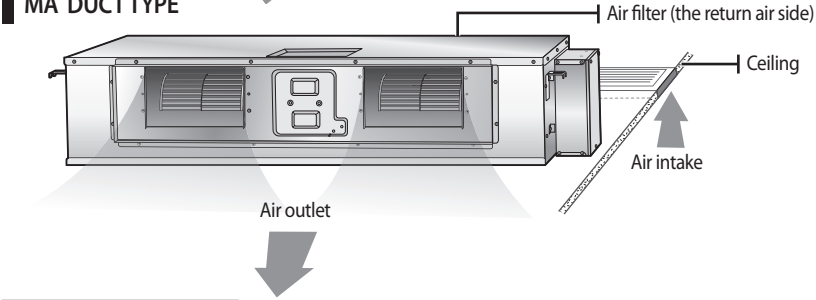

GLOBAL DUCT TYPE

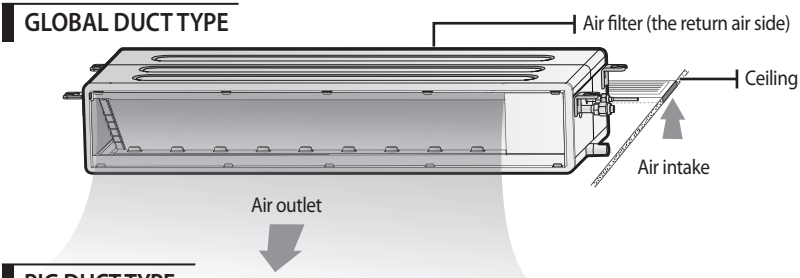

BIG DUCT TYPE

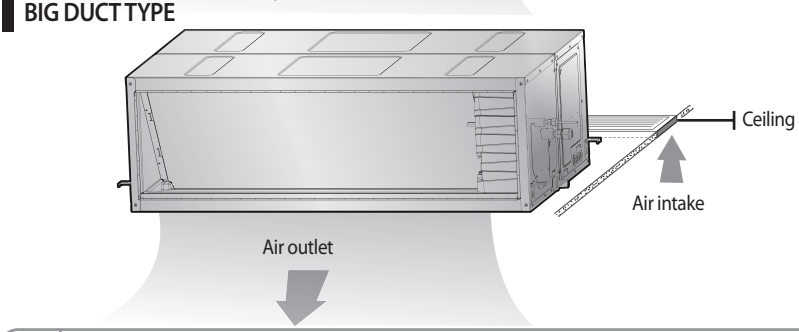

NOTE
- Your air conditioner and display may look slightly different from the illustration shown above depending on your model.

Cleaning and maintaining the air conditioner

Cleaning the filter

For the best performance from your air conditioner, clean it periodically. When cleaning, make sure to unplug from the unit for user's safety.

When cleaning the filter, make sure to unplug the power from the unit. Washable foam based Air filter captures large particles from the air. The filter is cleaned with a vacuum or by hand washing.

ENGLISH

Slim duct type

1. Slide out the Air filter on the rear side panel to the right side.

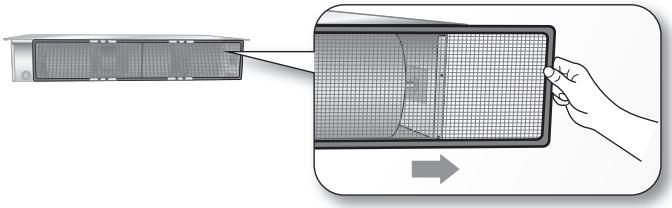

2. Clean the Air filter with a vacuum cleaner or soft brush. If dust is too heavy, then rinse it with running water and dry it in a ventilated area.

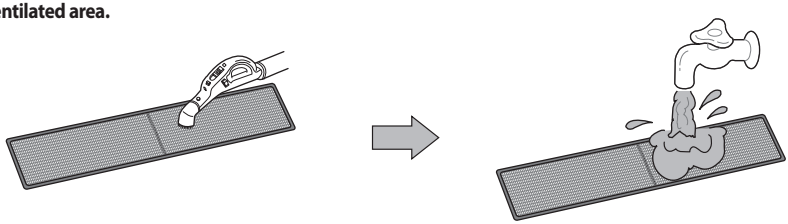

- For best conditions, repeat every two weeks.
- If the Air filter dries in a confined (or humid) area, odors may generate. If it occurs,re-clean and dry it in a ventilated area.

3. Insert the Air filter back in its original position.

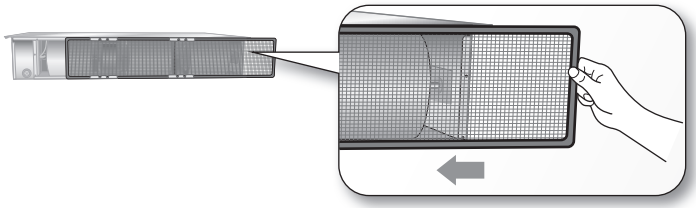

NOTE

- The illustration shown above may differ from yours depending on your model.
- After cleaning the filter, press the **Filter Reset** button on the remote control for 2 seconds to reset the filter schedule. Filter sign indicator will be on for cleaning time.

Cleaning and maintaining the air conditioner

MA duct type

1. Slide out the Air filter on the rear side panel to the right side.

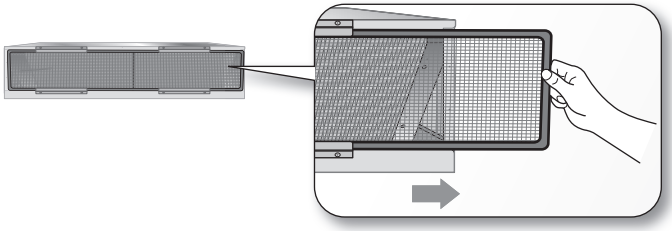

2. Clean the Air filter with a vacuum cleaner or soft brush. If dust is too heavy, then rinse it with running water and dry it in a ventilated area.

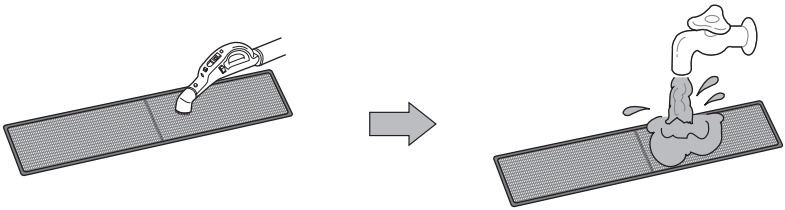

- For best conditions, repeat every two weeks.
- If the Air filter dries in a confined (or humid) area, odors may generate. If it occurs, re-clean and dry it in a ventilated area.

3. Insert the Air filter back in its original position.

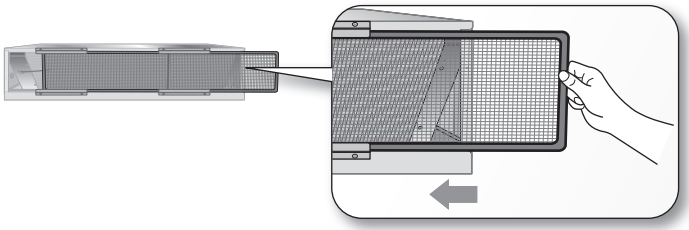

NOTE
- The illustration shown above may differ from yours depending on your model.
- After cleaning the filter, press the **Filter Reset** button on the remote control for 2 seconds to reset the filter schedule. Filter sign indicator will be on for cleaning time.

GLOBAL DUCT (Plastic Type)

1. Press both hooks and take the filter downward.

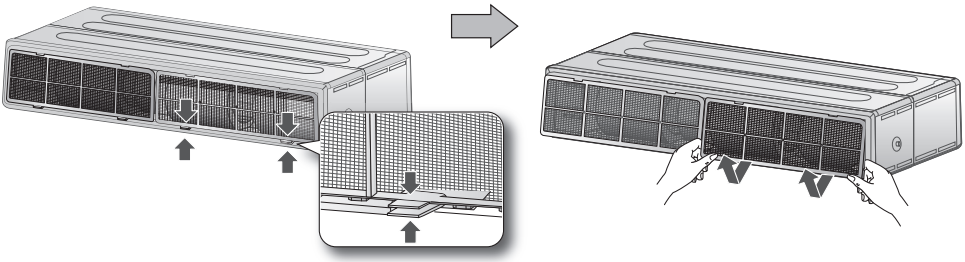

2. Clean the Air filter with a vacuum cleaner or soft brush. If dust is too heavy, then rinse it with running water and dry it in a ventilated area.

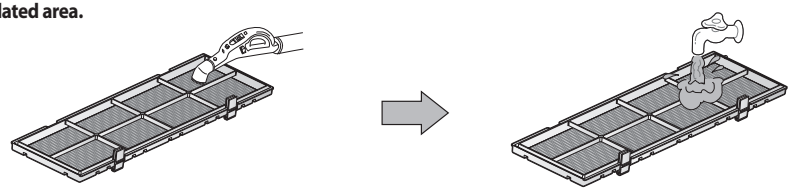

- For best conditions, repeat every two weeks.
- If the Air filter dries in a confined (or humid) area, odors may generate. If it occurs, re-clean and dry it in a ventilated area.

3. Insert the Air filter back in its original position.

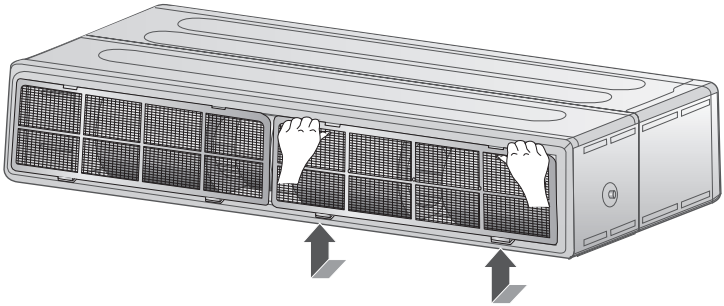

NOTE
- The illustration shown above may differ from yours depending on your model.
- After cleaning the filter, press the **Filter Reset** button on the remote control for 2 seconds to reset the filter schedule. Filter sign indicator will be on for cleaning time.

Cleaning and maintaining the air conditioner

GLOBAL DUCT (Steel wire Type)

1. Pull out the Air filter from the frame .

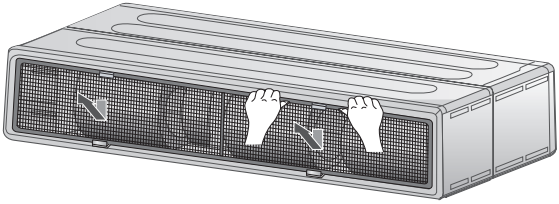

2. Clean the Air filter with a vacuum cleaner or soft brush. If dust is too heavy, then rinse it with running water and dry it in a ventilated area.

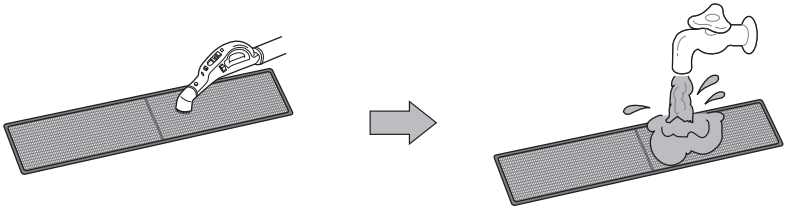

- For best conditions, repeat every two weeks.
- If the Air filter dries in a confined (or humid) area, odors may generate. If it occurs, re-clean and dry it in a ventilated area.

3. Insert the Air filter back in its original position.

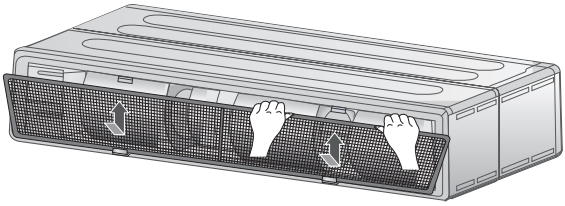

NOTE
- The illustration shown above may differ from yours depending on your model.
- After cleaning the filter, press the **Filter Reset** button on the remote control for 2 seconds to reset the filter schedule. Filter sign indicator will be on for cleaning time.

If the air conditioner will not be used for an extended period of time, dry the air conditioner to maintain it in best condition.

- ▶ Dry the air conditioner thoroughly by operating in Fan mode for 3 to 4 hours and disconnect the power plug. There may be internal damage if moisture is left in components.
- ▶ Before using the air conditioner again, dry the inner components of the air conditioner again by running in Fan mode for 3 to 4 hours. This helps remove odors which may have generated from dampness.

Periodical checks

Refer to the following chart to maintain the air conditioner properly.

Type	Description	Monthly	Every 4 months	Once a year
Indoor unit	Clean the air filter (1)	●		
	Clean the condensate drain pan (2)			●
	Thoroughly clean the heat exchanger (2)			●
	Clean the condensate drain pipe (2)		●	
	Replace the remote control batteries (1)			●
Outdoor unit	Clean the heat exchanger on the outside of the unit (2)		●	
	Clean the heat exchanger on the inside of the unit (2)			●
	Clean the electric components with jets of air (2)			●
	Verify that all the electric components are firmly tightened (2)			●
	Clean the fan (2)			●
	Verify that all the fan assembly is firmly tightened (2)			●
	Clean the condensate drain pan (2)			●

●: This check mark requires checking the indoor/outdoor unit periodically, following to the description to maintain the air conditioner properly.

NOTE

- The described operations should be performed more frequently if the area of installation is very dusty.

CAUTION

- These operations must always be performed by qualified personnel. For more detailed information, see the installation part in the manual.

ENGLISH

Cleaning and maintaining the air conditioner

Maintaining your air conditioner

Internal protections via the unit control system

▶ This internal protection operates if an internal fault occurs in the air conditioner.

Type	Description
Anti-protection of internal battery	The compressor will be off to protect internal battery when the air conditioner operates in Cool mode.
Protect compressor	The air conditioner does not start operating immediately to protect the compressor of the outdoor unit after it has been started.

Appendix

Troubleshooting

Refer to the following chart if the air conditioner operates abnormally. This may save time and unnecessary expenses.

PROBLEM	SOLUTION
The air conditioner does not operate immediately after it has been restarted.	• Because of the protective mechanism, the appliance does not start operating immediately to keep the unit from overloading. The air conditioner will start in 3 minutes.
The air conditioner does not work at all.	• Check that the power plug is properly connected. Insert the power plug into the wall socket correctly. • Check if the circuit breaker is switched off. • Check if there is a power failure. • Check your fuse. Make sure it is not blown out.
The temperature does not change.	• Check if you selected Fan mode. Press the **Mode** button on the remote control to select another mode.
The cool air does not come out of the air conditioner.	• Check if the set temperature is higher than the current temperature. Press the **Temperature** button on the remote control to change the set temperature. Press the **Temperature** button to decrease the temperature. • Check if the air filter is blocked by dirt. Clean the air filter every two weeks. • Check if the air conditioner has just been turned on. If so, wait 3 minutes. Cool air does not come out to protect the compressor of the outdoor unit. • Check if the air conditioner is installed in a place with a direct exposure to sunlight. Hang curtains on windows to boost cooling efficiency. • Check if the cover or any obstacle is not near the outdoor unit. • Check if the refrigerant pipe is too long.
The fan speed does not change.	• Check if you selected Auto or Dry mode. The air conditioner automatically adjusts the fan speed to Auto in Auto/Dry mode.

PROBLEM	SOLUTION
Timer function does not set.	• Check if you press the **Power** button on the remote control after you have set the time.
Odors permeate in the room during operation.	• Check if the appliance is running in a smoky area or if there is a smell entering from outside. Operate the air conditioner in Fan mode or open the windows to air out the room.
The air conditioner makes a bubbling sound.	• A bubbling sound may be heard when the refrigerant is circulating through the compressor. Let the air conditioner operate in a selected mode. • When you press the **Power** button on the remote control, noise may be heard from the drain pump inside the air conditioner.
Remote control is not working.	• Check if your batteries are depleted. • Make sure batteries are correctly installed. • Make sure nothing is blocking your remote control sensor. • Check that there are strong lighting apparatus near the air conditioner. Strong light which comes from fluorescent bulbs or neon signs may interrupt the electric waves.
The air conditioner does not turn on or off with the wired remote control.	• Check if you set the wired remote control for group control.
The wired remote control does not operate.	• Check if TEST indicator is displayed on the wired remote control. If so, turn off the unit and switch off the circuit breaker. Call your nearest contact center.
The indicators of the digital display flashes.	• Press the **Power** button on the remote control to turn the unit off and switch the circuit breaker off. Then, switch it on again.

This product is not manufactured for Iran.
SVC Warranty will not be applicable and the user
will be responsible for service expenses when the product is used in Iran.

QUESTIONS OR COMMENTS?

COUNTRY	CALL	OR VISIT US ONLINE AT
U.A.E	800-SAMSUNG (800 - 726 7864)	www.samsung.com/ae/support (English) www.samsung.com/ae_ar/support (Arabic)
OMAN	800-SAMSUNG (800 - 726 7864)	
KUWAIT	183-CALL (183-2255)	
BAHRAIN	8000-GSAM (8000-4726)	
Qatar	800-CALL (800-2255)	
Egypt	08000-726786 16580	www.samsung.com/eg/support
Algeria	021 36 11 00	www.samsung.com/n_africa/support
Pakistan	0800-Samsung (72678)	www.samsung.com/pk/support
Tunisia	80-1000-12	www.samsung.com/n_africa/support
JORDAN	0800-22273 06 5777444	www.samsung.com/Levant/support (English)
Syria	18252273	www.samsung.com/Levant/support (English)
IRAN	021-8255	www.samsung.com/iran/support
Morocco	080 100 2255	www.samsung.com/n_africa/support
Saudi Arabia	920021230	www.samsung.com/sa/support www.samsung.com/sa_en/support (English)

Duct Type Series

Air Conditioner
user manual

Planet First 100% Recycled Paper

This manual is made with 100% recycled paper.

imagine the possibilities

Thank you for purchasing this Samsung product.

EN ES FR AR DB68-04089A-02

SAMSUNG